Module: General electronics

Tutorial Worksheet No. 1: **Two-port networks**

Duration: 3 weeks

Exercises to do in class: Week1: 01 Week2: 04,05 Week3: 06, 08

Assignment to submit: Week1: 02 Week2: 03 Week3: 07, 10

Definitions:

Impedance parameters [Z]

$$\cdot\begin{bmatrix} V_1 \\ V_2 \end{bmatrix} = \begin{bmatrix} z_{11} & z_{12} \\ z_{21} & z_{21} \end{bmatrix}\begin{bmatrix} i_1 \\ i_2 \end{bmatrix}$$

Admittance parameters [Y]

$$\cdot\begin{bmatrix} i_1 \\ i_2 \end{bmatrix} = \begin{bmatrix} y_{11} & y_{12} \\ y_{21} & y_{21} \end{bmatrix}\begin{bmatrix} V_1 \\ V_2 \end{bmatrix}$$

Hybrid parameters [H]

$$\cdot\begin{bmatrix} V_1 \\ i_2 \end{bmatrix} = \begin{bmatrix} h_{11} & h_{12} \\ h_{21} & h_{21} \end{bmatrix}\begin{bmatrix} i_1 \\ V_2 \end{bmatrix}$$

Inverse hybrid parameters [G]

$$\cdot\begin{bmatrix} i_1 \\ V_2 \end{bmatrix} = \begin{bmatrix} g_{11} & g_{12} \\ g_{21} & g_{21} \end{bmatrix}\begin{bmatrix} V_1 \\ i_2 \end{bmatrix}$$

Transmission parameters [T]

$$\cdot\begin{bmatrix} V_1 \\ i_1 \end{bmatrix} = \begin{bmatrix} A & B \\ C & D \end{bmatrix}\begin{bmatrix} V_2 \\ -i_2 \end{bmatrix}$$

inverse transmission parameters [t]

$$\cdot\begin{bmatrix} V_2 \\ i_2 \end{bmatrix} = \begin{bmatrix} a & b \\ c & d \end{bmatrix}\begin{bmatrix} V_1 \\ -i_1 \end{bmatrix}$$

Exercise 01* (week 1):

find the impedance and the admittance parameters of the following two-port networks:

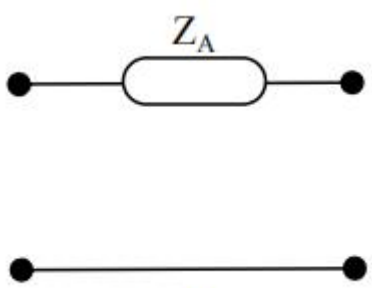

Fig.1

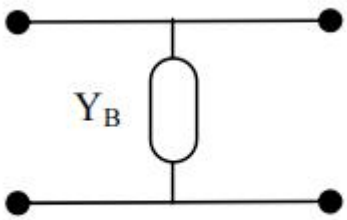

Fig. 2

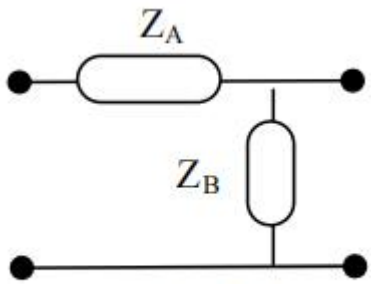

Fig. 3

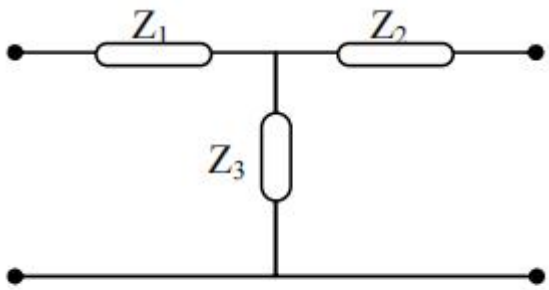

Fig. 4

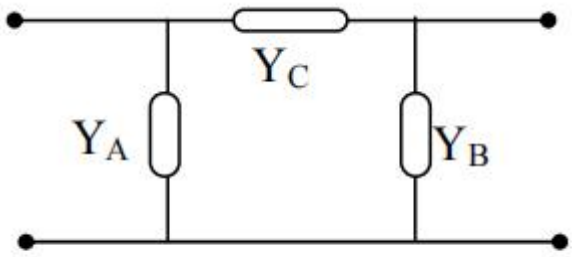

Fig. 5

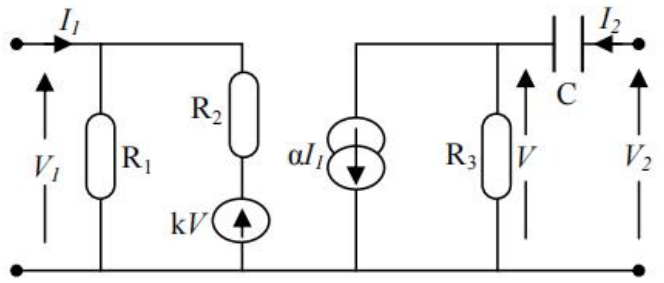

Fig.6

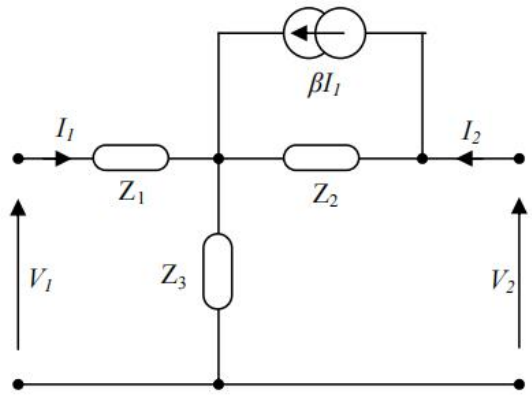

Fig.7

Exercise 02: (week 1)

Find the hybrid [H], the inverse hybrid [G], the transmission [T] and the inverse transmission [t] parameters of the two-port networks of the exercise 01.

Exercise 03: (week 2)

I.1. Consider a quadripole Q defined by its impedance matrix $Z = \begin{bmatrix} z_{11} & z_{12} \\ z_{21} & z_{22} \end{bmatrix}$. Find its admittance matrix Y as a function of the parameters z_{11}, z_{12}, z_{21}, and z_{22}. *Specify the conditions for the existence of this transformation.*

2. Consider a quadripole Q defined by its admittance matrix $Y = \begin{bmatrix} y_{11} & y_{12} \\ y_{21} & y_{22} \end{bmatrix}$.. Determine its hybrid matrix H as a function of the parameters y_{11}, y_{12}, y_{21}, and y_{22}. *Specify the conditions for the existence of this transformation.*

3. Consider a quadripole (two-port network) Q defined by its hybrid matrix $H = \begin{bmatrix} h_{11} & h_{12} \\ h_{21} & h_{22} \end{bmatrix}$. Determine its impedance matrix Z as a function of the parameters h_{11}, h_{12}, h_{21}, and h_{22}. *Specify the conditions for the existence of this transformation.*

4. Consider two quadripoles Q_1 and Q_2 defined respectively by their hybrid matrices:

$$H_1 = \begin{bmatrix} 1 & 2 \\ 3 & 4 \end{bmatrix} \text{ and } H_2 = \begin{bmatrix} 1 & 1 \\ 2 & 4 \end{bmatrix}.$$

We form quadripole Qt by the parallel - parallel interconnection of the two quadripoles Q_1 and Q_2.

a) Draw the schematic diagram showing the parallel-parallel connection of the two quadripoles Q_1 and Q_2.

b) Find the equivalent hybrid matrix of quadripole Qt.

II. Derive the conversion relationships for the two-port network parameters shown in the following table.

	z		y		h		g		T		t	
z	z_{11}	z_{12}	$\frac{y_{22}}{\Delta_y}$	$-\frac{y_{12}}{\Delta_y}$	$\frac{\Delta_h}{h_{22}}$	$\frac{h_{12}}{h_{22}}$	$\frac{1}{g_{11}}$	$-\frac{g_{12}}{g_{11}}$	$\frac{A}{C}$	$\frac{\Delta_T}{C}$	$\frac{d}{c}$	$\frac{1}{c}$
	z_{21}	z_{22}	$-\frac{y_{21}}{\Delta_y}$	$\frac{y_{11}}{\Delta_y}$	$-\frac{h_{21}}{h_{22}}$	$\frac{1}{h_{22}}$	$\frac{g_{21}}{g_{11}}$	$\frac{\Delta_g}{g_{11}}$	$\frac{1}{C}$	$\frac{D}{C}$	$\frac{\Delta_t}{c}$	$\frac{a}{c}$
y	$\frac{z_{22}}{\Delta_z}$	$-\frac{z_{12}}{\Delta_z}$	y_{11}	y_{12}	$\frac{1}{h_{11}}$	$-\frac{h_{12}}{h_{11}}$	$\frac{\Delta_g}{g_{22}}$	$\frac{g_{12}}{g_{22}}$	$\frac{D}{B}$	$-\frac{\Delta_T}{B}$	$\frac{a}{b}$	$-\frac{1}{b}$
	$-\frac{z_{21}}{\Delta_z}$	$\frac{z_{11}}{\Delta_z}$	y_{21}	y_{22}	$\frac{h_{21}}{h_{11}}$	$\frac{\Delta_h}{h_{11}}$	$-\frac{g_{21}}{g_{22}}$	$\frac{1}{g_{22}}$	$-\frac{1}{B}$	$\frac{A}{B}$	$-\frac{\Delta_t}{b}$	$\frac{d}{b}$
h	$\frac{\Delta_z}{z_{22}}$	$\frac{z_{12}}{z_{22}}$	$\frac{1}{y_{11}}$	$-\frac{y_{12}}{y_{11}}$	h_{11}	h_{12}	$\frac{g_{22}}{\Delta_g}$	$-\frac{g_{12}}{\Delta_g}$	$\frac{B}{D}$	$\frac{\Delta_T}{D}$	$\frac{b}{a}$	$\frac{1}{a}$
	$-\frac{z_{21}}{z_{22}}$	$\frac{1}{z_{22}}$	$\frac{y_{21}}{y_{11}}$	$\frac{\Delta_y}{y_{11}}$	h_{21}	h_{22}	$-\frac{g_{21}}{\Delta_g}$	$\frac{g_{11}}{\Delta_g}$	$-\frac{1}{D}$	$\frac{C}{D}$	$\frac{\Delta_t}{a}$	$\frac{c}{a}$
g	$\frac{1}{z_{11}}$	$-\frac{z_{12}}{z_{11}}$	$\frac{\Delta_y}{y_{22}}$	$\frac{y_{12}}{y_{22}}$	$\frac{h_{22}}{\Delta_h}$	$-\frac{h_{12}}{\Delta_h}$	g_{11}	g_{12}	$\frac{C}{A}$	$-\frac{\Delta_T}{A}$	$\frac{c}{d}$	$-\frac{1}{d}$
	$\frac{z_{21}}{z_{11}}$	$\frac{\Delta_z}{z_{11}}$	$-\frac{y_{21}}{y_{22}}$	$\frac{1}{y_{22}}$	$-\frac{h_{21}}{\Delta_h}$	$\frac{h_{11}}{\Delta_h}$	g_{21}	g_{22}	$\frac{1}{A}$	$\frac{B}{A}$	$\frac{\Delta_t}{d}$	$-\frac{b}{d}$
T	$\frac{z_{11}}{z_{21}}$	$\frac{\Delta_z}{z_{21}}$	$-\frac{y_{22}}{y_{21}}$	$-\frac{1}{y_{21}}$	$-\frac{\Delta_h}{h_{21}}$	$-\frac{h_{11}}{h_{21}}$	$\frac{1}{g_{21}}$	$\frac{g_{22}}{g_{21}}$	A	B	$\frac{d}{\Delta_t}$	$\frac{b}{\Delta_t}$
	$\frac{1}{z_{21}}$	$\frac{z_{22}}{z_{21}}$	$-\frac{\Delta_y}{y_{21}}$	$-\frac{y_{11}}{y_{21}}$	$-\frac{h_{22}}{h_{21}}$	$-\frac{1}{h_{21}}$	$\frac{g_{11}}{g_{21}}$	$\frac{\Delta_g}{g_{21}}$	C	D	$\frac{c}{\Delta_t}$	$\frac{a}{\Delta_t}$
t	$\frac{z_{22}}{z_{12}}$	$\frac{\Delta_z}{z_{12}}$	$-\frac{y_{11}}{y_{12}}$	$-\frac{1}{y_{12}}$	$\frac{1}{h_{12}}$	$\frac{h_{11}}{h_{12}}$	$-\frac{\Delta_g}{g_{12}}$	$-\frac{g_{22}}{g_{12}}$	$\frac{D}{\Delta_T}$	$\frac{B}{\Delta_T}$	a	b
	$\frac{1}{z_{12}}$	$\frac{z_{11}}{z_{12}}$	$-\frac{\Delta_y}{y_{12}}$	$-\frac{y_{22}}{y_{12}}$	$\frac{h_{22}}{h_{12}}$	$\frac{\Delta_h}{h_{12}}$	$-\frac{g_{11}}{g_{12}}$	$-\frac{1}{g_{12}}$	$\frac{C}{\Delta_T}$	$\frac{A}{\Delta_T}$	c	d

Exercise 04: (week 2)

1.Find the transmission parameters of the circuit shown in Fig.8

2. Deduce the impedance parameters of the circuit shown in Fig.9

3. Using the table of the exercise 3 and the results of the question 2, find the rapport voltage rapport $\frac{V}{E}$ of the circuit

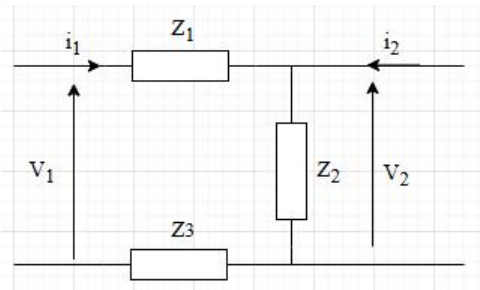

Fig.8

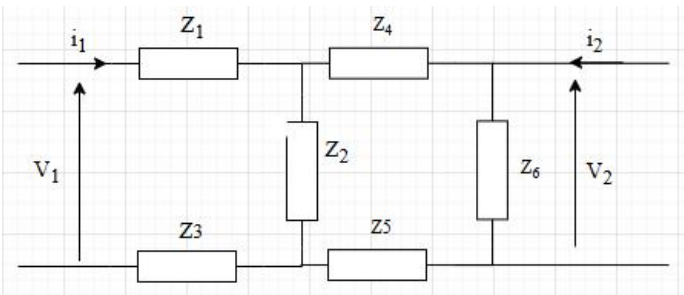

Fig.9

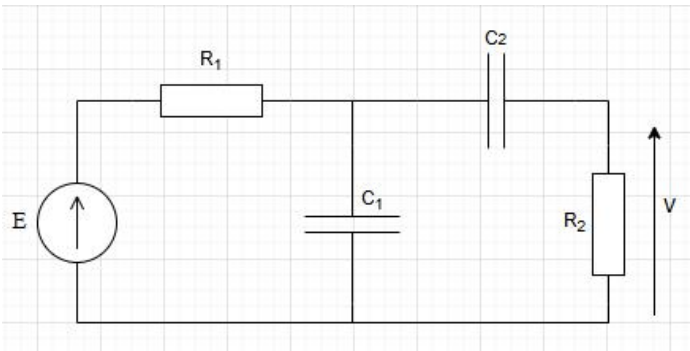

Fig.10

Exercise 05: (week 2)

1) Consider a two-port network Q defined by its hybrid matrix H:
   a) Give the system of equations that defines the H matrix.
   b) Establish the equivalent circuit of the two-port network Q using the parameters of the H matrix.
2) The two-port network is loaded by a resistance R_C :
   a) Determine the voltage gain $A_v = \frac{V_2}{V_1}$
   b) Determine the input impedance $Z_{in} = \frac{V_1}{I_1}$
   c) Deduce the overall voltage gain (or composite gain) of the circuit $A_{vg} = \frac{V_2}{e_g}$

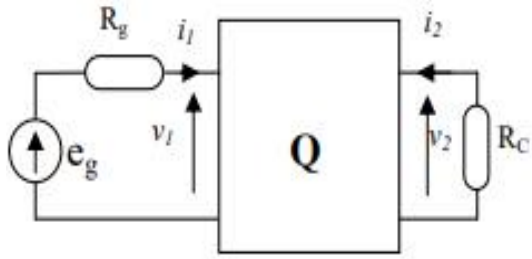

Exercise 06: (week 3)

Determine the impedance matrix [Z] of the following two-port network (Fig.11) and deduce the voltage gain when the output of the two-port network is terminated by a load impedance Z_L.

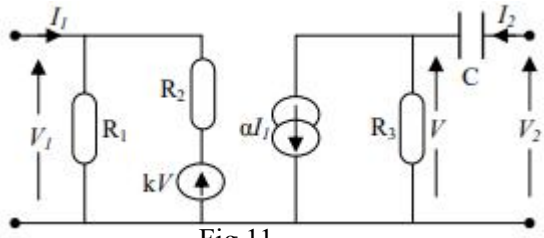

Fig.11

Exercise 07: (week 3)

Consider the circuit shown in the figure Fig.12:

A. What type of controlled source is this?
B. Calculate the hybrid matrix ([H] matrix).
C. Calculate the open-circuit voltage gain of the two-port network,
D. Calculate the voltage gain of the two-port network when it is terminated by a load impedance R_L.

Given: E_g = 10v, R_g = 1KΩ, R_1 = 2KΩ, R = 4KΩ, R_2 = 2KΩ, R_L = 2KΩ and μ = 29.

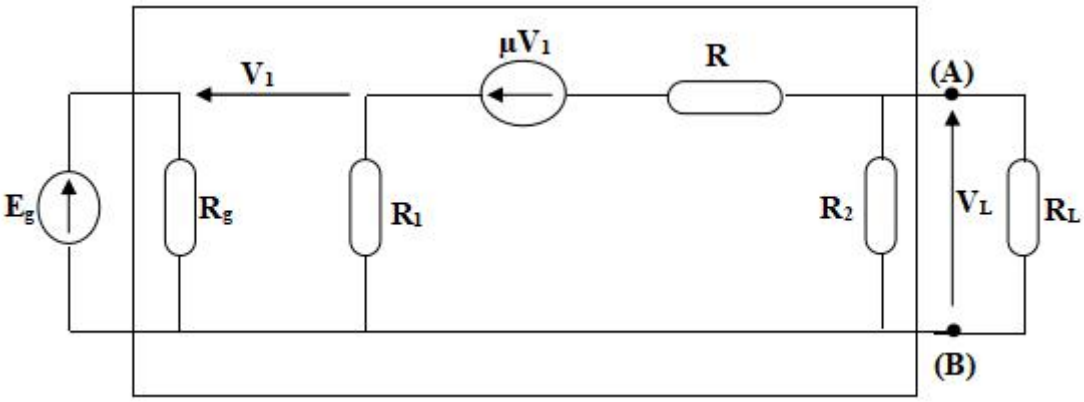

Fig.12

Exercise 08: (week 3)

I. Consider the two-port network (quadripole) shown in the figure below, constructed with four identical resistors of value R and a coupled current generator J= α i. where a is a real constant and $\alpha \in \mathbb{R} - \{3\}$.

1. Show that the impedance matrix of the quadripole Q is defined as:

$$Z = \frac{R}{3-\alpha}\begin{bmatrix}(5-\alpha) & 1\\ (\alpha+1) & 2\end{bmatrix}$$

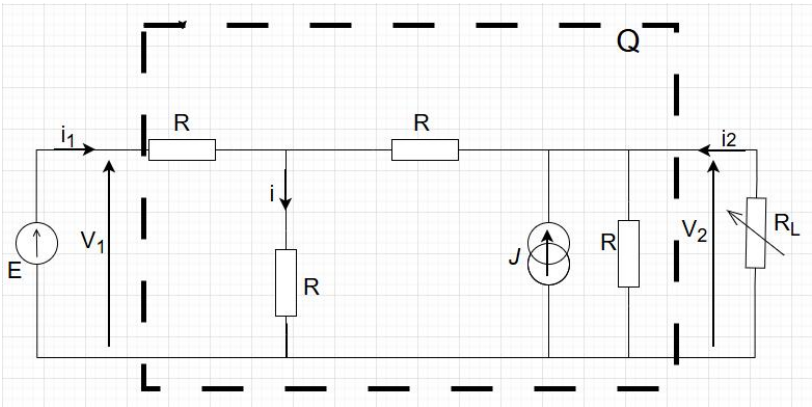

Fig.13

2. For the two-port network loaded with a resistance RL at the output port, express in terms of α, R, and RL:
   - Voltage gain (Av)
   - Input impedance (Zin)

II. We connect n identical quadripoles Q in parallel to form the two-port network Qn

3. Express [Z'] the impedance matrix of the new quadripole Qn as a function of α, R and n.

Exercise 09:

Consider the two-port network (quadripole) shown in the figure Fig.14, constructed with two coupled voltage generators and four identical resistors of value R.

1. Express the impedance matrix [Z] in terms of R,
2. Draw the equivalent circuit that represents this impedance matrix. Show all impedance elements clearly.
3. For the two-port network loaded with a resistance R_L at the output port, express in terms of E, R, and R_L:
   - Voltage gain (A_v)
   - Input impedance (Z_{in})
   - Output impedance (Z_{out})

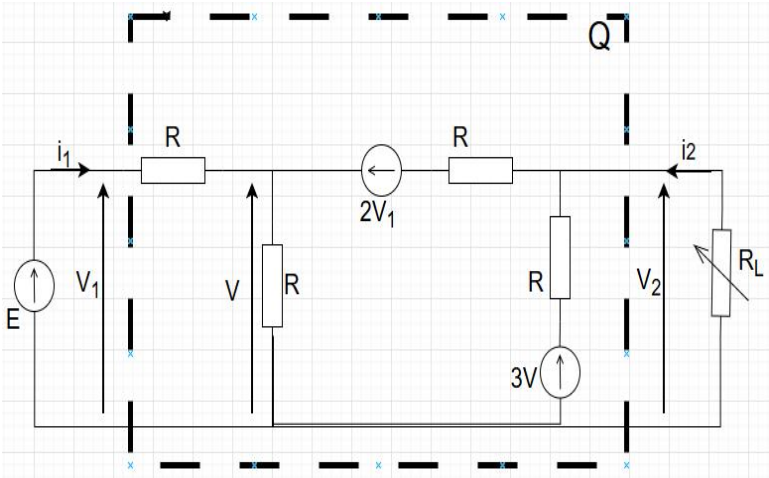

Fig.14

Exercise 10: (Week3)

I. Consider the two-port network (quadripole) **Q** shown in the figure below, consisting of two coupled current generators and six resistors with values indicated in the figure.

1. Express **[Z]** the impedance matrix of the quadripole ***Q*** as a function of ***R***.

II. We connect ***n*** identical quadripoles ***Q*** in parallel to form the two-port network ***Qn***

2. Express **[*Z'*]** the impedance matrix of the new quadripole ***Qn*** as a function of ***R*** and ***n***.
3. Draw the simplified equivalent circuit that represents this impedance matrix **[*Z'*]**. Show clearly all the impedance matrix elements.

III. For ***Qn*** loaded with a resistance $\boldsymbol{R_L}$ at the output port, express as a function of ***E, n, R***, and $\boldsymbol{R_L}$:

- Voltage gain (**Av**)
- Input impedance (**Zin**)
- Output impedance (**Zout**)

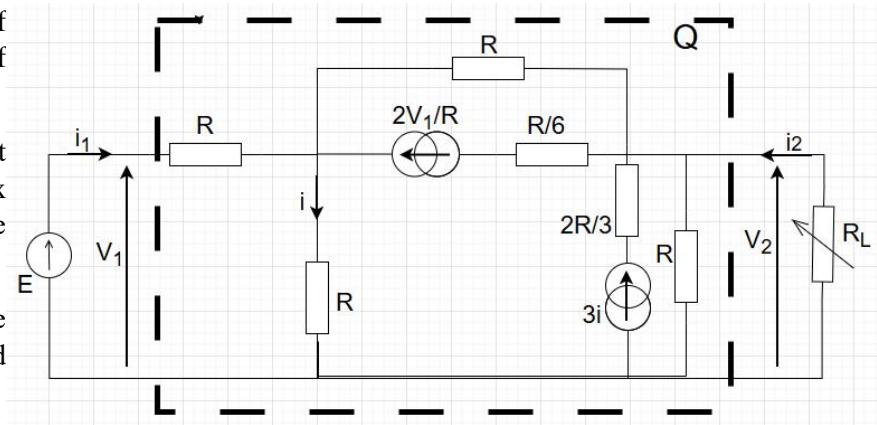

Fig.15